JOLI I

Plastic directional spotlight for GU10 LED light sources.

		RP EUR incl. VAT
R13556	JOLI I wall black 230V LED GU10 10W	48,00

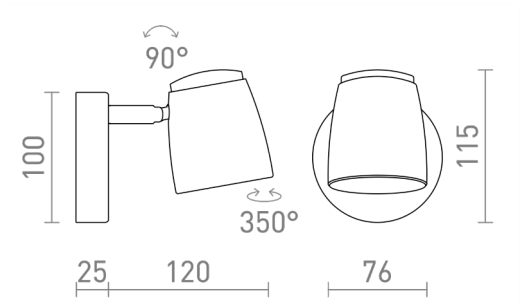

3D model

manual

G11841